Electrolux PROFESSIONAL

Digital Undercounter ecostore HP Concept Refrigerated Counter with Splashback - 3 Door (R290)

ITEM #

MODEL #

NAME #

SIS #

AIA #

714659 (EC7R3BL) 3-door Refrigerated Counter, -2+10°C, AISI 304 (R290), with splashback

Short Form Specification

Item No.

AISI 304 stainless steel panels, AISI 430 bottom panel, galvanized back panel. Worktop thickness 50mm. N. 3 full doors. Built-in refrigeration unit. Operating temperature: -2+10°C. R290 gas in refrigeration circuit. Supplied with 1 grid for each door compartment

APPROVAL:

Main Features

- Adjustable temperature range from -2 °C to +10 °C to suit meat, fish and dairy storage requirements.
- Anti-tilt runners accept GN 1/1 containers.
- Prearranged to fit RS485 port to facilitate connection to a remote computer and integrated HACCP systems.
- 0mm clearance installation space: tower configuration cooling unit guarantee performance with frontal ventilation only; this unique solution allows installation against the wall or side by side with other appliances, even on the cooling unit side to maximize the use of kitchen space.
- Combination of doors and drawers to suit any configuration needed, with the possibility to change the configuration on site. Right cooling unit available on request.
- Frontal and easy access to all components in the cooling unit.
- Certified safety CE requirements.
- Equipped with forced air circulation system for rapid cooling and temperature distribution within the cell.
- Small footprint to fit even in limited environments.
- Self closing stainless steel doors (< 90°).
- Digital control panel with temperature display.
- Raised rear upstand permits unit to be connected up against the wall for better hygiene.
- Digital white-digit display with internal temperature display and setting, manual activation of defrost cycle and turbo frost cycle (to rapidly cool warm loads).
- Tropicalized unit.

Construction

- 3 compartments with 3 doors.
- Internal and external structure in AISI 304 stainless steel. External back panel in galvanized steel and bottom in AISI 430 stainless steel as standard on all models.
- Worktop in AISI 304 Stainless steel with a 50 mm profile.
- If needed, working top can be removed for easier handling during installation (in case of narrow doors).
- Anti-drip profile on stainless steel worktop edge.
- Interior base with rounded corners, pressed from a single sheet.
- Internal structure with 15 charging positions (3 cm pitch) available to host GN 1/1 grids, ensuring higher net capacity and a greater storage space.
- Built-in refrigeration unit.
- Developed and produced in ISO 9001 and ISO 14001 certified factory.
- Fault code display.
- Pre-arranged for drain-pipe.
- Excellent space optimisation thanks to the compact dimensions.
- Mounted on Stainless steel adjustable legs to give 150 mm clearance for ease of cleaning.

- Extractable cooling unit to facilitate maintenance.
- Ease of cleaning and high hygiene standards thanks to the rounded internal corners, the easily removable runners, grids and air conveyors.
- Mounted on stainless steel feet to give 150 mm (-5/+50 mm) clearance for ease of cleaning the floor.

Sustainability

- CFC and HCFC free, highly ecological refrigerant type: R290 (ecological gas in foam: cyclopentane). Hydrocarbon refrigerant gas R290 for the lowest environmental impact (GWP=3), to reduce green house and ozone depletion effects.
- Hot gas automatic evaporation of defrost water.
- Top energy efficiency (class A) and granted uniformity even at extreme working conditions (class 5; 40°C and 40% humidity): unbeatable performance, certified by energy test protocol EN16825:2016.
- Fitted with 90 mm thickness of cyclopentane insulation for best insulating performance (thermal conductivity: 0,020 W/m*K) and lowest environmental impact (GWP=3).
- Removable triple-chamber balloon magnetic gasket to improve insulation and reduce energy consumption and ease of cleaning.

Included Accessories

- 3 of Kit 1/1 grey rilsan grid and 2 side runners for refrigerated counters PNC 881109

Optional Accessories

- 2x½ drawer kit for refrigerated counters PNC 881058 ❑
- 3x1/3 drawer kit for refrigerated counters PNC 881059 ❑
- 1/3 and 2/3 bottle drawer kit for refrigerated counters PNC 881071 ❑
- 1/1GN grey rilsan grid for refrigerated counters PNC 881107 ❑
- 2 side runners for 1/1 GN ecostore refrigerated counters PNC 881108 ❑
- Kit 1/1 grey rilsan grid and 2 side runners for refrigerated counters PNC 881109 ❑
- 1/1 GN plastic container, H=65 mm PNC 881110 ❑
- 1/1 GN plastic container, H=100 mm PNC 881111 ❑
- 1/1 GN plastic container, H=150 mm PNC 881112 ❑
- Kit 4 wheels, H=100 mm (2 with brakes) for refrigerated counters PNC 881191 ❑
- Kit 4 wheels, H=150 mm (2 with brakes) for 2&3 compartment refrigerated counters PNC 881193 ❑
- Lock for refrigerator/freezer counters with 3 compartments - h700mm (can be used in kit for Marine conversion) PNC 881243 ❑
- IoT module for refrigerated cabinets and counters PNC 881298 ❑

The company reserves the right to make modifications to the products without prior notice. All information correct at time of printing.

Digital Undercounter ecostore HP Concept Refrigerated Counter with Splashback - 3 Door (R290)

Front

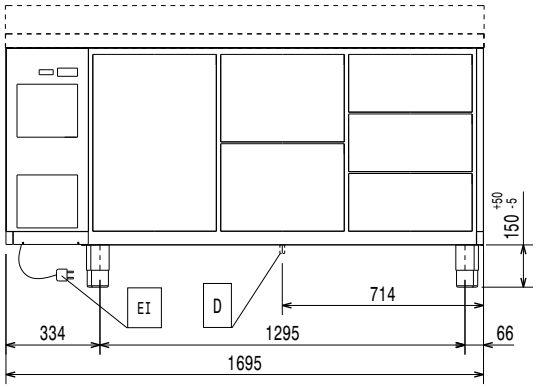

Side

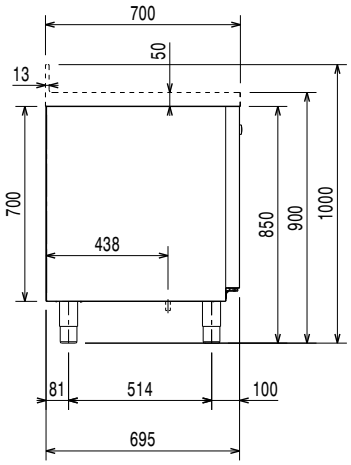

EI = Electrical inlet (power)

Top

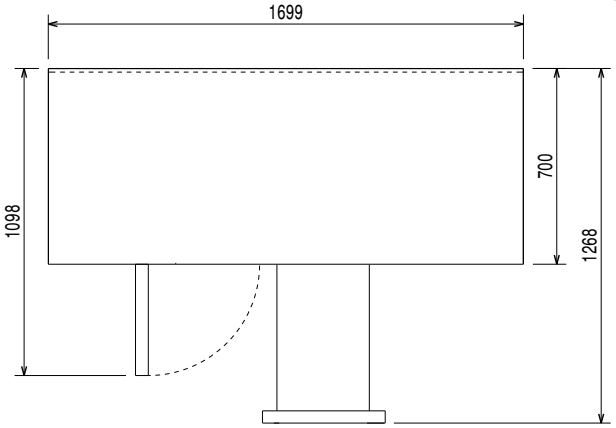

Electric

Supply voltage:	220-240 V/1 ph/50 Hz
Electrical power, max:	0.22 kW
Defrost Power:	0.27 kW
Plug type:	CE-SCHUKO

Key Information:

Net Volume:	271.2 lt
External dimensions, Width:	1699 mm
External dimensions, Depth:	700 mm
External dimensions, Height:	1000 mm
Internal Dimensions, Width:	1252 mm
Internal Dimensions, Depth:	560 mm
Internal Dimensions, Height:	550 mm
Net weight:	140 kg
Shipping volume:	1.61 m³
Depth with doors open:	1110 mm
Height adjustment:	-5/50 mm
Gross capacity:	440 lt

Refrigeration Data

Control type:	Digital
Refrigeration power at evaporation temperature:	-10 °C
Min/Max internal humidity:	40/85
Operating temperature min.:	-2 °C
Operating temperature max.:	10 °C
Compressor power:	1/4 hp
Operating mode:	Ventilated
Insulation:	90 mm (Cyclopentane)

ISO Certificates

ISO Standards:	ISO 9001; ISO 14001; ISO 45001; ISO 50001

Sustainability

Current consumption:	1.6 Amps
Refrigerant type:	R290
GWP Index:	3
Refrigeration power:	0 W
Refrigerant weight (unit 1):	65 g
Energy Class (EU Reg. 2015/1094):	A
Yearly and daily energy consumption (EU Reg. 2015/1094):	610kWh/year - 1.67kWh/24h
Climate class (EU Reg. 2015/1094):	Heavy Duty (5)
Energy Efficiency Index-EEI (EU Reg. 2015/1094):	24.56

The company reserves the right to make modifications to the products without prior notice. All information correct at time of printing.

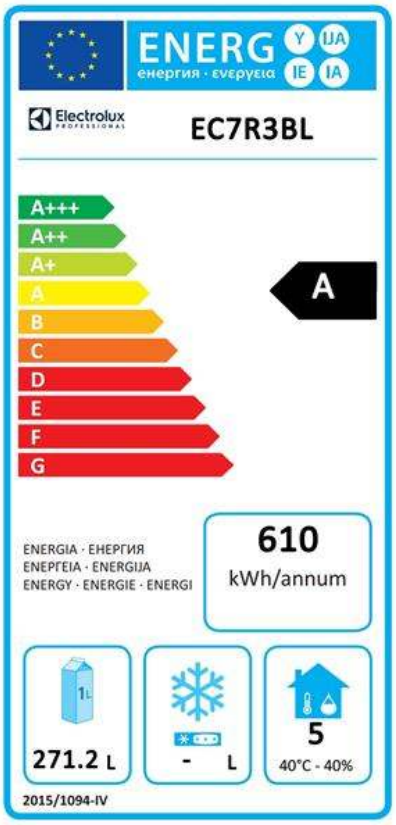

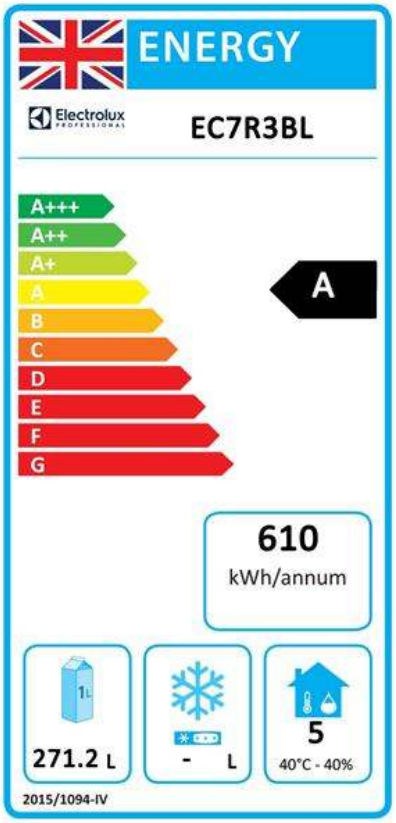

EU energy labelling from 1st July 2016

The European energy labelling scheme for professional refrigerators and freezers is based on requirements setting Minimum Energy Performance standards for commercial refrigeration cabinets sold within the EU. These requirements are designed to drive energy efficiency and environmentally friendly approach for professionals. The European energy labelling scheme will apply to all manufacturers and importers who sell and market products within the EU and it is mandatory across Europe. Important: all products which consume energy above the minimum level will not be able to be sold within the EU from 1 July 2016.

SI 2020 No. 1528.

Important: all products which consume energy above the minimum level will not be able to be sold within the EU from 1 July 2016.

The company reserves the right to make modifications to the products without prior notice. All information correct at time of printing.